605

Dimensions (mm)

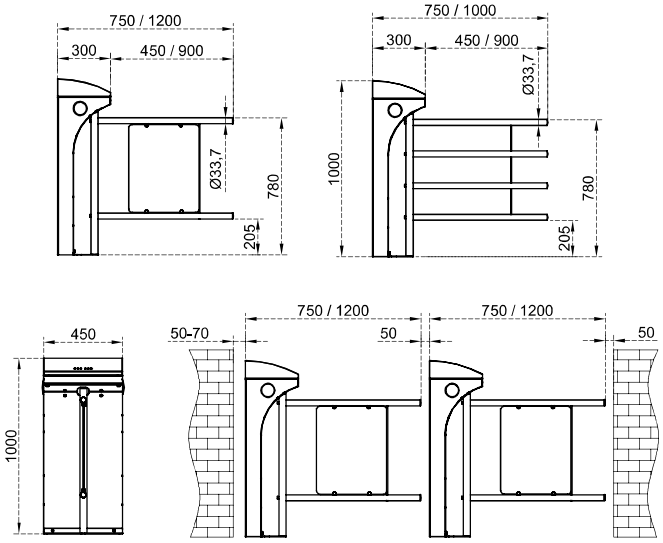

Technical Features

Place of Use	Indoors, outdoors (with wing adaptation)
Operating Temperature, Humidity	-20°C/+68°C (opt. -50°C with heater positive), RH %95 non-condensing.
Operating Intensity	%100, 7/24 use.
Body Features	**Material** : 304 grade (opt. 316 grade) stainless steel. **Finishing** : Orbital brushed matt (opt. electrostatic powder coating on stainless steel).
Wing	**Material** : Ø33,7x1,5 mm 304 grade stainless steel pipe with acrylic infill (for indoor use), Ø33,7x1,5 mm 304 grade stainless steel pipe (for outdoor use). **Finishing** : Satine brushed (opt. orbital brushed matt, electrostatic powder coating on stainless steel).
Indicators	**Side Status /Direction Indicators** : LED, standard. **Top Passage Indicator** : LED, standard.
Power	**Operating Voltage** : 110/220V AC 50/60 Hz. (±%10), 24V DC. **Consumption** : ~9W at stand-by, max ~44W (varies according to the options and accessories used).
Operating Modes	System operates bi-directionally (entry-exit). Operation modes can be changed through dip switch, IOS and/or android app. Entry - exit controlled Entry - exit free (with optional photocell) Entry controlled, exit free (with optional photocell) Exit controlled, entry free (with optional photocell) Electromechanical motorized operation.
Operating System	Electromechanical motorized operation.
Control System	All functions, parameters and operating modes can be changed through the control board (microprocessor controlled), IOS and/or android app. Firmware can be updated. All past function updates and changes are kept in the server and records can be traced. All inputs are opto-coupler protected. Controllable by dry contact (ground control). Compatible with all kinds of access control device. Optional RS232, RS485 or TCP/IP module is available. GET IT ON Google Play Download on the App Store
Flow Rate	Wing opening / closing time : ~1,5 sec.
Emergency Mode	System provides a free passageway (entry-exit) by opening the wing in preferred direction configured by dip switch (fail safe). Works compatible with fire warning and similar systems. At the end of an emergency situation, system returns to its normal operating mode.
Power-off Situation	System provides a free passageway (entry-exit) by manually pushing the wing towards entry or exit directions (fail safe). Optionally, can be set as entry-exit locked (fail secure). Free passageway can be granted by manual override key in fail secure option.
Weight	~37 kg
Optional Features and Accessories	Wireless remote control (receiver-transmitter), manual control, manual override key (with fail secure option), coin slot and coin box, single/multiple intelligent coin/token slot and box, counter (with/without reset), card reader mounting bracket, photocell alarm sensor, heater positive, top lid weight sensor, bottom plate, battery back-up, 316 grade stainless steel, RS232-RS485-TCP/IP modules, limiter, photocell for free mode, electrostatic powder coating on stainless steel.